Parts List		
STOCK No	DESCRIPTION	QTY
2C1801	Cap Plastic 2 Start	1
2M2044	Dump Valve Body	1
2N1201	Nozzle Holder (MK 1)	1
2S2007	O Ring	1
2S2008	O Ring (Viton Rubber)	1
2S2150	Dump Valve Diaphragm	1
3F3005	Cord Retainer Pin	1
4B1300	Series 2 Air Gun Butt Assembly	1
7A1003	Sachet Plunger/Cord Assembly (including 'U' seal)	1
7A2001	European Quick Release Fitting Assembly	1
7A2002	US Quick Release Fitting Assembly	1
7A2004	Standard Nut & Tail Connection	1
7A3003	Series 2 Regulator Assembly	1
7A3101	Silencer Assembly	1
7B3336	Barrel 336.6mm	1
7XS008	Series 2 Barrel Strap Assembly (including screws/nuts)	1

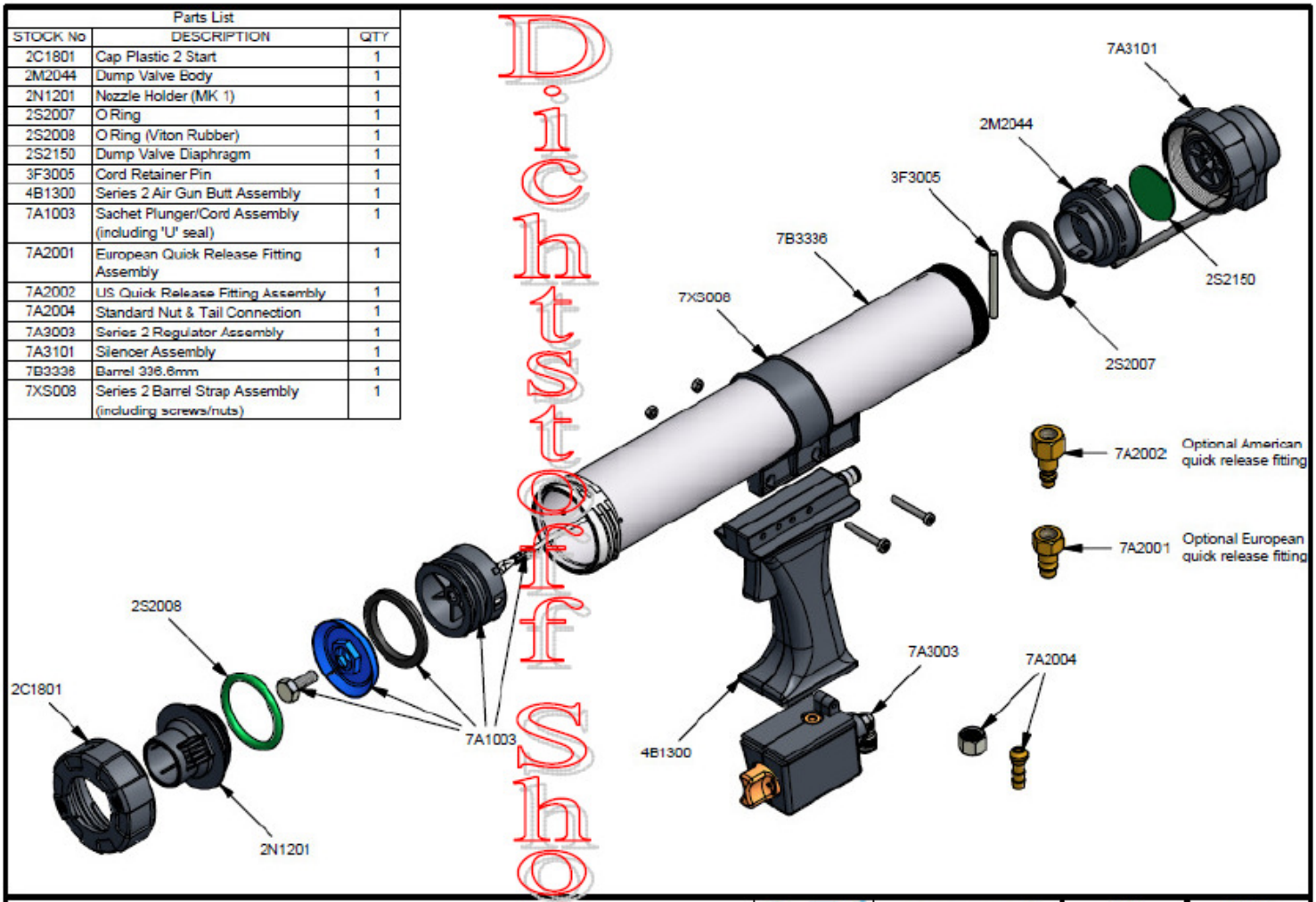

Dichtstoff Shop

Airflow II 400 Sachet	COX The original	www.pccox.co.uk sales@pccox.co.uk TEL:44(0)1635 264500	REV	DATE
			F	03/02/2005