Parts List		
STOCK No	DESCRIPTION	QTY
2C1002	Mk5 Catch Plate	1
2F1204	M8 Lock Nut	1
2F1210	M8 Nylock Nut	1
2F1421	Washer	1
2F1630	Screw	1
2S1007	Catch Plate Spring	1
2S1021	Release Plate Spring	1
2S2116	Re-inforced Rubber Seal	1
3C1438	Back Cap (with pin)	1
3F2404	Washer 49mm	1
3F2416	Washer With Spigot	1
3R1472	Release Plate	1
7B4004	Barrel 762mm	1
7C1007	Front Cap and Seal	1
7R1090	T Handle Rod 902mm	1
7XB036	Hexagonal Zinc Barrel Screw (Bushed)	1
7XB100	Mk 5 Butt/Trigger With Sleeve	1

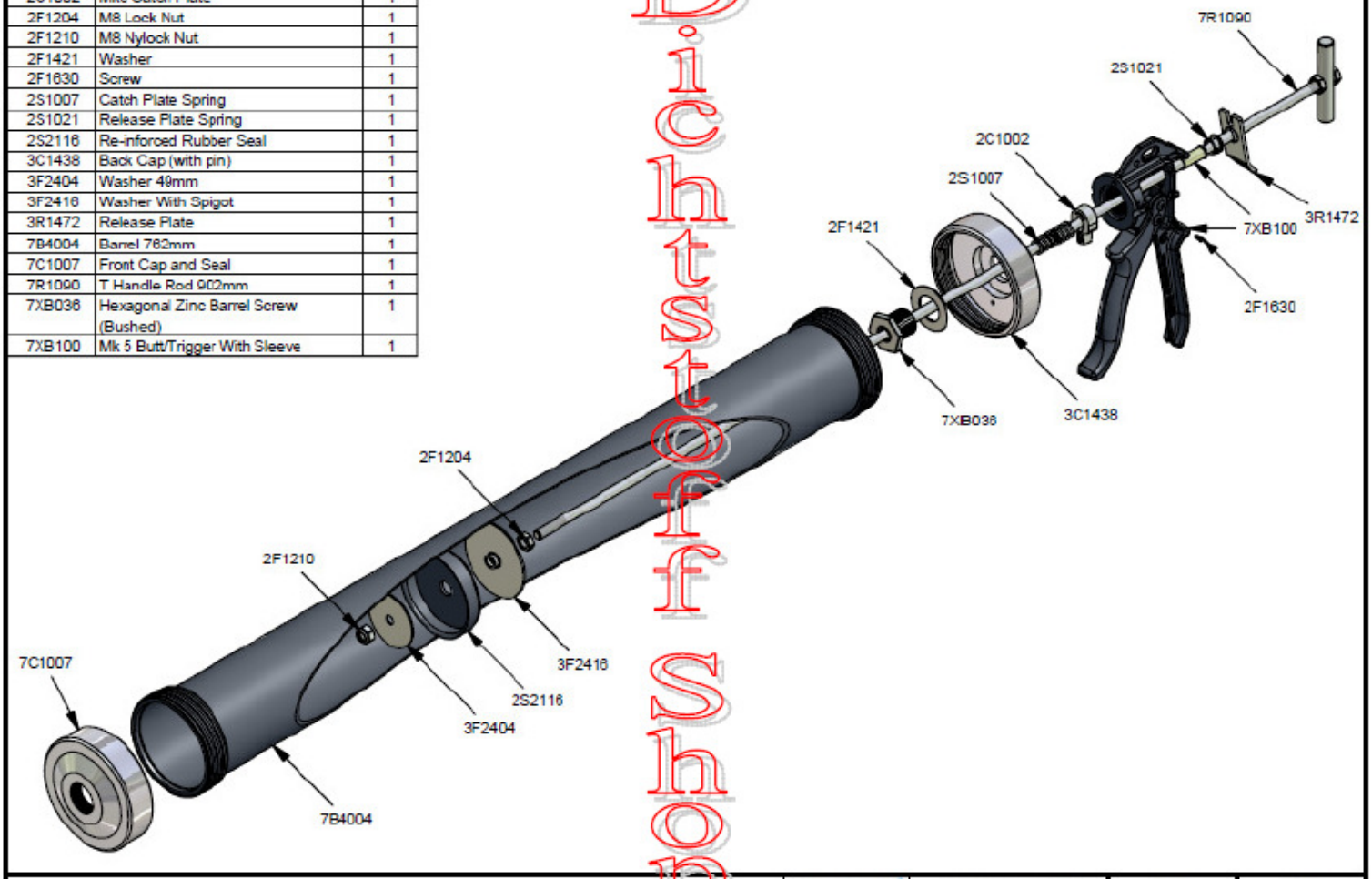

Dichtstoff Shop

Powerflow Bulk 3 Litre	The original	www.pccox.co.uk sales@pccox.co.uk TEL:-44(0)1635 264500	REV	DATE
			E	09/12/2004